结构特点 Design features

- 单端面、单弹簧、非平衡型、橡胶波纹管结构；
- 非推进型橡胶波纹管结构，密封性可靠。
- 安装尺寸符合ISO30369、DIN24960和GB6556标准，可替代克兰“Type 1”

- Single face, single spring, unbalanced, rubber bellows structure.
- Non–pusher elastomeric bellows seal.
- The installation dimensions comform to the standard of ISO3069, DIN24960 and GB6556. can replae of jorn crane "Typel"

材料 Materials(to DIN24960)

- 旋转环 Rotary Ring: B、Q1、Q2、U1、U2
- 静止环 Stationary Ring: Q1、Q2、U1、U2、V1
- 辅助密封 Auxiliary Seal: P、E、V
- 弹簧及其他结构件材料Spring and Other Parts: F、G

适用范围 Operatinglimits

- 压力 Pressure:≤1.6MPa
- 温度 Tcmperature:–20~140℃
- 线速度 Speeds:≤10m/sec
- 粘度 Viscosity:≤1.0Pa.s(1000cp)软对硬(Soft VS Hard)
  ≤3.5Pa.s(3500cp)硬对硬(Hard VS Hard)

用途 Applications

适用于泵类、搅拌器、压缩机和其它旋转轴设备。
Used in all types of rotating equipment, pumps, mixers, agitators and compressors.

介质 Medium

油类、水及其它弱腐蚀性溶液。
Oil,water and other weak corrosive fluid.

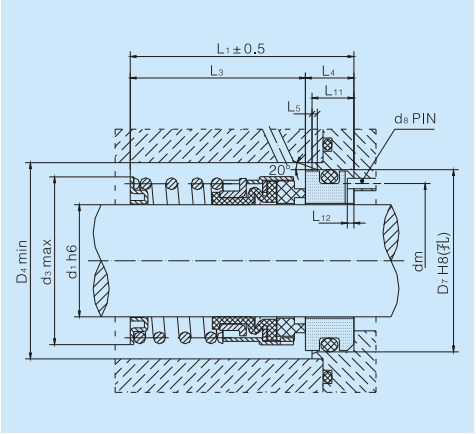

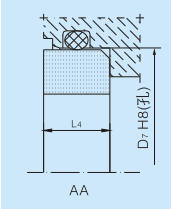

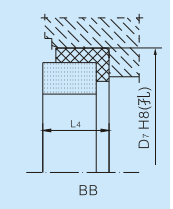

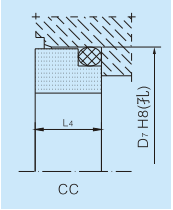

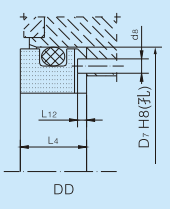

型号Model	d1	d3	D4	D7	d8	dm	L1	L3	L4	L5	L11	L12
CN K1–0.375	9.53	20.6	27.0	22.23	2.4		38.0	30.1	7.9	0.8	6.4	1.2
CN K1–0.500	12.70	23.8	30.1	25.40	2.4		38.0	30.1	7.9	0.8	6.4	1.2
CN K1–0.625	15.88	27.8	34.1	31.75	3.2		43.6	33.3	10.3	1.2	8.7	1.6
CN K1–0.750	19.05	30.9	37.3	34.93	3.2	29.0	43.6	33.3	10.3	1.2	8.7	1.6
CN K1–0.875	22.23	35.7	42.1	38.10	3.2	32.0	45.2	34.9	10.3	1.2	8.7	1.6
CN K1–1.000	25.40	38.1	44.5	41.28	3.2	35.0	50.8	39.7	11.1	1.2	9.5	1.6
CN K1–1.125	28.58	41.3	47.6	44.45	3.2	38.5	52.4	41.3	11.1	1.2	9.5	1.6
CN K1–1.250	31.75	46.0	50.8	47.63	3.2	43.5	52.4	41.3	11.1	1.2	9.5	1.6
CN K1–1.375	34.93	47.6	54.0	50.80	3.2	47.0	53.9	42.8	11.1	1.2	9.5	1.6
CN K1–1.500	38.10	50.8	57.2	53.98	3.2	50.0	53.9	42.8	11.1	1.2	9.5	1.6
CN K1–1.625	41.28	57.2	63.5	60.33	3.2	53.0	63.5	50.8	12.7	1.2	11.1	1.6
CN K1–1.750	44.45	60.3	66.7	63.50	3.2	57.0	63.5	50.8	12.7	1.2	11.1	1.6
CN K1–1.875	47.63	63.5	69.9	66.68	3.2	60.0	66.7	54.0	12.7	1.2	11.1	1.6
CN K1–2.000	50.80	66.7	74.6	69.85	3.2	63.0	66.7	54.0	12.7	1.2	11.1	1.6
CN K1–2.125	53.98	71.4	79.4	76.20	3.2	70.0	74.6	60.3	14.3	1.2	12.7	1.6
CN K1–2.250	57.15	74.6	82.6	79.38	3.2	73.0	74.6	60.3	14.3	1.2	12.7	1.6
CN K1–2.375	60.33	77.8	85.7	82.55	3.2	76.0	77.8	63.5	14.3	1.2	12.7	1.6
CN K1–2.500	63.50	80.9	88.9	85.73	3.2	80.0	77.8	63.5	14.3	1.2	12.7	1.6
CN K1–2.625	66.68	85.7	95.3	85.73	3.2	80.0	82.8	66.9	15.9	1.2	14.3	1.6
CN K1–2.750	69.85	88.9	98.4	88.90	3.2	83.0	82.8	66.9	15.9	1.2	14.3	1.6
CN K1–2.875	73.03	92.1	101.6	95.25	3.2	88.0	88.9	73.0	15.9	1.2	14.3	1.6
CN K1–3.000	76.20	95.3	106.3	98.43	3.2	92.0	88.9	73.0	15.9	1.2	14.3	1.6
CN K1–3.125	79.38	101.6	112.7	101.60	3.2	95.0	99.2	79.4	19.8	1.2	16.7	1.6
CN K1–3.250	82.55	104.8	115.9	104.78	3.2	98.0	99.2	79.4	19.8	1.2	16.7	1.6
CN K1–3.375	85.73	108.0	119.0	107.95	3.2	100.0	99.2	79.4	19.8	1.2	16.7	1.6
CN K1–3.500	88.90	111.1	122.2	111.13	3.2	105.0	99.2	79.4	19.8	1.2	16.7	1.6
CN K1–3.625	92.08	114.3	125.4	114.30	3.2	108.0	102.4	82.6	19.8	1.2	16.7	1.6
CN K1–3.750	95.25	117.5	128.6	117.48	3.2	110.0	102.4	82.6	19.8	1.2	16.7	1.6
CN K1–3.875	98.43	120.7	131.7	120.65	3.2	113.0	105.5	85.7	19.8	1.2	16.7	1.6
CN K1–4.000	101.60	123.8	134.9	123.83	3.2	115.0	105.5	85.7	19.8	1.2	16.7	1.6